METALLIC ALLOYS:

THEIR STRUCTURE AND CONSTITUTION.

BY

G. H. GULLIVER,

B.Sc., F.R.S.E., A.M.I.Mech.E., M.Inst.M.,
LECTURER IN ENGINEERING IN THE UNIVERSITY OF EDINBURGH.

THIRD EDITION.

With 310 Illustrations.

LONDON:
CHARLES GRIFFIN & COMPANY, LIMITED;
EXETER STREET, STRAND, W.C.2.
1919.

[*All Rights Reserved.*]

773

N19

PREFACE TO SECOND EDITION.

THE subject matter of this book has formed part of various courses of lectures on Alloys delivered in the Engineering Department of the University of Edinburgh, and in the Heriot-Watt College, Edinburgh, during several Winter Sessions, and it represents an attempt to present the Theory of Alloys on a systematic basis. The method of classification adopted appears to have been used first in a paper by Roberts-Austen and Stansfield—to which reference is made within—but it was left very incomplete by them. The author has tried to fill in the gaps, with some assistance from the work of Roozeboom, Tammann, Bancroft, and others. References are given for the experimental results quoted, but it is impossible to say how much one is indebted to the early papers of such pioneers as Osmond, Le Chatelier, Roberts-Austen, Heycock and Neville, Arnold, and Stead.

The book, obviously, is not intended as a guide to the practical manufacture of alloys, except in so far as a knowledge of the equilibrium conditions, and the unstable conditions of mixtures is of assistance in regulating their composition and heat treatment. It is addressed mainly to engineers and to students of engineering who desire some knowledge of the minute structure of metals and alloys, and of the manner in which the structure develops and changes.

Nearly all of the examples chosen to illustrate the principles laid down are of considerable practical importance. Most of the diagrams have been drawn specially, and in those obtained from experimental data the observed points have been plotted, so that the experienced reader may be independent of the personal opinions of the author. The

greater number of the micrographs have been prepared for this volume; some have been obtained in the course of various investigations, but are unpublished elsewhere.

Some of the figures have been borrowed, and for these the following grateful acknowledgments are made:—

To Messrs. R. & J. Beck, Ltd., for the use of blocks for Figs. 3, 4, and 5.

To the Council of the Institution of Mechanical Engineers for permission to reproduce Figs. 14, 47, 67, 76, 155, and 175.

To the Council of the Iron and Steel Institute for Figs. 148, 161, 166, 172, 233, 259, and 260.

To the Council of the Royal Society of London, and to Messrs. Heycock and Neville for Figs. 117 to 119, 156 to 160, 163, and 181 to 193.

To the Council of the Royal Society of London, and to Messrs, Rosenhain and Tucker for Figs. 140 and 141.

To the Société d'Encouragement des Arts et Manufactures, Paris, for Fig. 274.

To the *Journal of Physical Chemistry*, New York, for Fig. 275.

To the *Zeitschrift für Anorganische Chemie*, Gottingen, for Figs. 51, 52, 54, 69 to 72, 79 to 82, 123, and 124.

To the *Revue de Metallurgie*, Paris, for Fig. 146.

To *Metallurgie*, Aachen, for Figs. 286 to 291.

To Messrs. Dunod et Pinat, Paris, and to Dr. Guillet for Figs. 245 to 247, and 251.

G. H. G.

EDINBURGH, *January*, 1913.

PUBLISHERS' NOTE TO THIRD EDITION.

THE practical value of this book during the years of war is demonstrated by the exhaustion of the Edition, and continued demand for copies. The Author has had no time for revision, and this reprint is of immediate necessity.

December, 1918.

CONTENTS.

CHAPTER I.

Methods of Investigation.

		PAGE
1.	Introduction,	1
2.	Preparation of Specimens for Microscopic Examination,	2
3.	Microscope,	6
4.	Pyrometer,	10
5.	Furnaces,	12
6.	Preparation of Alloys,	12
	References,	13

CHAPTER II.

The Physico-Chemical Equilibrium of Mixed Substances.

7.	Alloys as Solutions,	14
8.	Mixtures of Liquid Metals,	15
9.	Mixtures of Solid Metals,	20
10.	Metallic Mixtures which are partly Liquid and partly Solid,	23
11.	Freezing Point Curve,	26
12.	Melting Point Curve,	28
13.	Equilibrium Diagram,	31
	References,	35

CHAPTER III.

Binary Alloys in which no definite Chemical Compounds are formed.

14.	Classification of Alloys,	36
15.	Class I. (*a*)—(1),	37
16.	The Lead-Antimony Alloys,	43
17.	Class I. (*a*)—(2),	48
18.	The Copper-Bismuth Alloys.	49

PAGE

19. Class I. (*b*)—(1), ... 51
20. The Silver-Copper Alloys, ... 59
21. The Aluminium-Tin Alloys, ... 64
22. Class I. (*b*)—(2), ... 66
23. The Cadmium-Mercury Alloys, ... 71
24. Class I. (*c*), ... 72
25. The Copper-Manganese Alloys, ... 77
26. The Copper-Nickel Alloys, ... 79
27. Class II. (*a*), ... 80
28. The Copper-Lead Alloys, ... 85
29. Class II. (*b*), ... 88
30. Class III., ... 91
31. The Aluminium-Lead Alloys, ... 92
32. Summary of Classification of Binary Alloys in which no Chemical Compounds are formed, ... 93

References, ... 94

CHAPTER IV.

Binary Alloys which show Evidence of the Formation of Definite Chemical Compounds.

33. Metallic Compounds, ... 95
34. Class I. (*a*)—(1), ... 98
35. The Magnesium-Tin Alloys, ... 103
36. Class I. (*a*)—(2), ... 105
37. Class I. (*b*)—(1), ... 108
38. The Aluminium-Magnesium Alloys, ... 111
39. The Copper-Antimony Alloys, ... 114
40. Class I. (*b*)—(2), ... 121
41. The Antimony-Tin Alloys, ... 126
42. Class I. (*c*)—(1), ... 131
43. The Magnesium-Cadmium Alloys, ... 133
44. Class I. (*c*)—(2), ... 134
45. Class II. (*a*), ... 134
46. Class II. (*b*), ... 138
47. Class III., ... 140

References, ... 140

CHAPTER V.

Transformations which take place in Completely Solid Metals and Alloys.

48. Allotropic Change of a Pure Metal, ... 141
49. The Lead-Tin Alloys, ... 142
50. Polymorphic Change of a Compound 144

PAGE

51. Recrystallisation of Solid Solutions (1), ... 144
52. Recrystallisation in the Iron-Carbon Alloys, and in the Copper-Aluminium-Alloys, ... 146
53. Recrystallisation of Solid Solutions (2), ... 150
54. ,, ,, ,, (3), ... 151
55. ,, ,, ,, (4), ... 152
References, ... 156

CHAPTER VI.

Equilibrium Conditions in Metallic Mixtures.

56. The Phase Rule, ... 157
57. Suspended Transformation; Metastable and Labile Equilibrium, . 164
58. The Zinc-Antimony Alloys, ... 170
59. Imperfect Equilibrium, ... 173
60. Cooling Curves and Heating Curves, ... 178
61. The Complete Equilibrium Diagram, ... 179
References, ... 18

CHAPTER VII.

The Structure of Metals and Alloys.

62. Development of Structure, ... 18
63. Crystallography, ... 18
64. Crystallisation of a Pure Metal and of a Metallic Compound, . . 18
65. Crystallisation of an Eutectic, ... 19
66. Crystallisation of an Eutectiferous Mixture, ... 20
67. Crystallisation of a Solid Solution, ... 20
68. Structural Modifications and their Causes, ... 20
69. Segregation, ... 20
70. Effects of Viscosity, Liquid Currents, and Surface Tension, . . 21
71. Contraction Flaws and Blowholes, ... 21
72. Recrystallisation of Solid Metals and Alloys, ... 21
73. Chilling, Annealing, and Vibration, ... 22
74. Mechanical Strain, ... 23
75. Polish, ... 24
References, ... 24

CHAPTER VIII.

The Bronzes, the Brasses, and other Alloys of Copper.

76. Copper and its Alloys, ... 2
77. The Copper-Tin Alloys, ... 2

[illegible]

[illegible]

CHAPTER X

Alloys of more than Two Metals.

[illegible]

CHAPTER XI.

The Microscope in Engineering Practice.

PAGE

109. Practical Uses of Structural Observations, ... 380
110. Structural Observation as a Testing Method, ... 380
111. Accidents and Breakdowns, ... 383
112. Defects arising during the Process of Manufacture, . . . 384
113. Defects resulting from subsequent Treatment of Raw Metals and Alloys, ... 391
References, ... 396

INDEX, ... 397

LIST OF ILLUSTRATIONS.

FIG. P

1. Device for mounting specimens, ...
2. Oblique illumination, ...
3. Prism illuminator, ...
4. Beck's vertical illuminator, ...
5. Rosenhain's metallurgical microscope, ...
6. Typical curve of solubility for two liquid metals, ...
7. Curves of liquid solubility for mixtures of zinc with lead and with bismuth (Spring and Romanoff), ...
8. Typical curves of solubility for solid and for liquid metals, . . .
9. „ cooling curve for a pure metal, ...
10. „ „ „ binary alloy, ...
11. Cooling curves for a series of alloys employed to obtain the freezing-point curve and the melting-point curve, ...
12. Determination of period of solidification of eutectic from a cooling curve, ...
13. Typical equilibrium diagram for binary alloy, ...
14. Surfusion of tin (Roberts-Austen), ...
15. Equilibrium diagram; liquid metals completely soluble, solid metals completely insoluble in each other; two branches of liquidus meet at an eutectic point, ...
16. Typical cooling curves for alloys of Fig. 15, ...
17. Diagram of constitution of alloys of Fig. 15, and duration of period of solidification of the eutectic, ...
18. Structural diagram for alloys of Fig. 15, ...
19. Equilibrium diagram for lead-antimony alloys (Gontermann), . . .
20. Lead-antimony alloy, containing 90 per cent. of lead, etched with picric acid. Dark primary crystal skeletons of lead, surrounded by eutectic. Magnified 100 diameters, ...
21. Lead-antimony eutectic alloy, containing 87·5 per cent. of lead, etched with picric acid. Magnified 100 diameters, ...
22. Lead-antimony alloy, containing 40 per cent. of lead, etched with picric acid. Bright crystals of antimony, surrounded by eutectic. Magnified 100 diameters, ...
23. Lead-antimony alloy, containing 83·5 per cent. of lead, etched with picric acid. The section is taken from near the top of a slowly-cooled ingot, and shows the flotation of the crystals of antimony. Magnified 50 diameters, ...
24. Same alloy as Fig. 23, cooled too quickly to allow of flotation of the antimony. Magnified 100 diameters, ...
25 Equilibrium diagram: liquid metals completely soluble, solid metals completely insoluble in each other; the series shows no eutectic alloy, ...
26 Equilibrium diagram for copper-bismuth alloys (Jeriomin), . . .

FIG. PAGE

27. Copper-bismuth alloy, containing 25 per cent. of copper, etched with nitric acid. Light primary crystal skeletons of copper in a dark ground mass of bismuth. Magnified 100 diameters, . . 50
28. Copper containing 1 per cent. of bismuth, etched with a mixture of ferric chloride and hydrochloric acid. The bismuth forms a thin continuous network around the grains of copper, and some small globules are entangled within the grains. Magnified 100 diameters, 50
29. Equilibrium diagram: liquid metals completely soluble, solid metals partially soluble in each other; two branches of liquidus meet at an eutectic point, ... 52
30. Constitutional diagram for alloys of Fig. 29, ... 55
31. Structural diagram for alloys of Fig. 29, ... 57
32. Equilibrium diagram for silver-copper alloys. (●, Heycock and Neville; ○, Friedrich and Leroux), ... 58
33. Silver-copper alloy, containing 85 per cent. of silver, etched with an alkaline solution of copper-ammonium chloride. Light primary crystallites of silver-rich solution, surrounded by dark eutectic. Magnified 100 diameters, ... 59
34. Silver-copper eutectic alloy, containing 71·9 per cent. of silver, etched with alkaline copper-ammonium chloride. Magnified 200 diameters, 60
35. Silver-copper alloy, containing 40 per cent. of silver, etched with alkaline copper-ammonium chloride. Primary crystal skeletons of dark copper-rich constituent, surrounded by eutectic. Magnified 100 diameters, ... 60
36. Silver-copper alloy, containing 4 per cent. of silver, etched with alkaline copper-ammonium chloride. Dark primary crystal aggregates of copper-rich solution, becoming richer in silver towards their boundaries, in which are some bright specks of silver-rich material. Magnified 100 diameters, ... 61
37. Section of silver coin, parallel to face, etched with alkaline copper-ammonium chloride. Complex system of flow-lines caused by mechanical treatment. Magnified 25 diameters, ... 62
38. Silver coin, similar to Fig. 37, heated to incipient melting, etched with alkaline copper-ammonium chloride. The metal has re-crystallised. Magnified 100 diameters, ... 62
39. Equilibrium diagram for aluminium-tin alloys. (●, Shepherd; ○, Gwyer), ... 63
40. Aluminium-tin alloy, containing 10 per cent. of tin, etched with caustic potash. The primary aluminium-rich crystal skeletons show dark cores, and are surrounded by a thin network of nearly pure tin. Magnified 100 diameters, ... 64
41. Same alloy as Fig. 40, annealed. The tin has been nearly absorbed, and the solid solution has become nearly uniform. Magnified 100 diameters, ... 65
42. Aluminium-tin alloy, containing 33 per cent. of tin, etched with caustic potash. Large primary skeletons of aluminium-rich solution, surrounded by tin-rich network. Magnified 100 diameters, 65
43. Aluminium-tin alloy, containing 70 per cent. of tin, etched with caustic potash. Dark primary skeletons of aluminium-rich solution in a ground mass of nearly pure tin. Magnified 100 diameters, 66
44. Equilibrium diagram; liquid metals completely soluble, solid metals partially soluble in each other; two branches of liquidus meet at a transition point, ... 67
45. Constitutional diagram for alloys of Fig. 44, ... 69
46. Equilibrium diagram for cadmium-mercury alloys. (●, Bijl; ○, Pushin), ... 70
47. Equilibrium diagram; liquid metals completely soluble, solid metals completely soluble in each other; liquidus shows a minimum, . 72

FIG. PAGE

48. Equilibrium diagram; liquid metals [illegible] olid metals completely soluble in each other; [illegible] ximum, . 74
49. Equilibrium diagram; liquid metals [illegible] olid metals completely soluble in each other; [illegible] minimum nor maximum, ... 75
50. Equilibrium diagram for copper-manganese alloys (Zemczuzny, Urazow, and Rykowskow), ... 76
51. Copper-manganese alloy, containing 11 per cent. of manganese, etched with a mixture of ferric chloride and hydrochloric acid. The alloy has not reached equilibrium, and shows light copper-rich skeletons in a dark manganese-rich ground mass. Magnified 100 diameters (Zemczuzny, Urazow, and Rykowskow), . . 77
52. Copper-manganese alloy, containing 28 per cent. of manganese, etched with acid ferric chloride. The composition corresponds nearly with the minimum point of the liquidus, and the alloy is a uniform solid solution. Magnified 100 diameters (Zemczuzny, Urazow, and Rykowskow), ... 78
53. Equilibrium diagram for copper-nickel alloys (Guertler and Tammann), ... 78
54. Copper-nickel alloy, containing 30 per cent. of nickel, annealed, etched with acid ferric chloride. Uniform solid solution. Magnified 60 diameters (Kurnakow and Zemczuzny), ... 79
55. Equilibrium diagram; liquid metals partially soluble, solid metals completely insoluble in each other, ... 81
56. Typical cooling curves for alloys of Fig. 55, ... 82
57. Constitutional diagram for alloys of Fig. 55, ... 84
58. Equilibrium diagram for copper-lead alloys (●, Heycock and Neville; ○, Roberts-Austen; □, Friedrich and Leroux), . . 85
59. Copper-lead alloy, containing 60 per cent. of lead, etched with nitric acid. The alloy consists of two layers, the upper rich in copper, and the lower rich in lead. Magnified 25 diameters, . 86
60. Copper-lead alloy, containing 30 per cent. of lead, chill cast, etched with ammonia. The primary dendrites of copper are embedded in a matrix of lead. Magnified 100 diameters, ... 87
61. Copper-lead alloy, containing 2 per cent. of lead, etched with ammonia. The grains of copper are surrounded by a dark network of lead. Magnified 100 diameters, ... 88
62. Equilibrium diagram; liquid metals partially soluble, solid metals partially soluble in each other, ... 89
63. Constitutional diagram for alloys of Fig. 62, ... 90
64. Equilibrium and constitutional diagram; liquid metals completely insoluble, solid metals [illegible] ible in each other, . . 91
65. Equilibrium diagram for [illegible] alloys (Gwyer), . . 92
66. Aluminium-lead alloy, containing 80 per cent. of lead, etched with caustic potash. Upper layer of aluminium, in which a small quantity of lead is entangled; lower layer of lead. Magnified 25 diameters, ... 93
67. Equilibrium diagram; occurrence of a compound which has a definite melting point; the compound and each metal are completely soluble one in the other when liquid, completely insoluble when solid, ... 99
Constitutional diagram for alloys of Fig. 67, ... 101
Equilibrium diagram for magnesium-tin alloys (Grube), . . . 102
Magnesium-tin alloy, containing 24 per cent. of tin. The large black areas represent primary crystallites of magnesium, and the striated ground mass is the eutectic mixture of this metal with the compound $SnMg_2$. Magnified 100 diameters (Kurnakow and Stepanow), ... 103

FIG. PAGE

71. Magnesium-tin alloy, containing 55 per cent. of tin. Primary crystals of $SnMg_2$ in eutectic mixture of magnesium and $SnMg_2$. Magnified 60 diameters (Kurnakow and Stepanow), . . . 104
72. Magnesium-tin alloy, containing 91 per cent. of tin. Primary crystals of $SnMg_2$ in eutectic mixture of tin and $SnMg_2$. Magnified 45 diameters (Kurnakow and Stepanow), ... 104
73. Equilibrium diagram; compound and each metal completely soluble one in the other when liquid, completely insoluble when solid; compound is a transition product, ... 105
74. Typical cooling curves for alloys of Fig. 73, ... 106
75. Constitutional diagram for alloys of Fig. 73, ... 108
76. Equilibrium diagram; compound and each metal completely soluble one in the other when liquid, partially soluble when solid; compound has a definite melting point, ... 109
77. Constitutional diagram for alloys of Fig. 76, ... 110
78. Equilibrium diagram for aluminium-magnesium alloys (Grube), . 111
79. Aluminium-magnesium alloy, containing 20 per cent. of magnesium, etched with hydrochloric acid. Light aluminium-rich dendrites in dark γ ground mass. Magnified 40 diameters (Grube), . . 112
80. Aluminium-magnesium alloy, containing 55 per cent. of magnesium, etched with ammonium chloride. Nearly homogeneous γ-solution. Magnified 40 diameters (Grube), ... 112
81. Aluminium-magnesium alloy, containing 60 per cent. of magnesium, etched with ammonium chloride. Light primary skeletons of γ surrounded by dark eutectic. Magnified 40 diameters (Grube), . 113
82. Aluminium-magnesium alloy, containing 80 per cent. of magnesium, etched with ammonium chloride. Dark magnesium-rich dendrites surrounded by light network of eutectic. Magnified 40 diameters (Grube), ... 113
83. Equilibrium diagram for copper-antimony alloys (●, Baykoff; Roberts-Austen and Stansfield), ... 114
84. Copper-antimony alloy, containing 30 per cent. of antimony, chill cast, etched with nitric acid. Dark primary skeletons of copper in matrix of α-solution, divided into irregular grains, the boundaries of which are largely independent of the primary crystallisation. Magnified 100 diameters, ... 115
85. Copper-antimony alloy, containing 31 per cent. of antimony, chill cast, etched with [illegible] chloride. Crystal aggregates of α-solution showing skeleton formation. Magnified 100 diameters, ... 116
86. Copper-antimony alloy, containing 34 per cent. of antimony, [illegible] C. for six hours, etched with alkaline copper-ammonium chloride. Uniform α, somewhat cracked. Magnified 100 diameters, ... 116
87. Copper-antimony alloy, containing 43 per cent. of antimony, chill cast, etched with alkaline copper-ammonium chloride. Primary grains of α-solution, and fine network of $SbCu_2$. Magnified 100 diameters, ... 117
88. Same alloy as Fig. 87, slowly cooled. Dark primary α undergoing transition, and showing striations along the cleavages. Light coloured, moss-like growth of $SbCu_2$ on both sides of original network, which still remains visible. Magnified 100 diameters, . 118
89. Copper-antimony alloy, containing 48·6 per cent. of antimony, slowly cooled, etched with alkaline copper-ammonium chloride. The alloy is nearly pure $SbCu_2$, the dark areas being the remains of the primary α-solution. Magnified 100 diameters, . . . 119
90. Copper-antimony alloy, containing 67 per cent. of antimony, etched

FIG. PAGE

with nitric acid. Primary bars of $SbCu_2$ in ground mass of eutectic. Magnified 50 diameters, ... 120

91. Copper-antimony alloy, containing 77 per cent. of antimony, etched with nitric acid. Primary crystals of antimony surrounded by pure eutectic. Magnified 100 diameters, 120

92. Copper-antimony alloy, containing 85 per cent. of antimony, etched with nitric acid. Primary crystals of antimony surrounded by eutectic. Magnified 100 diameters, ... 121

93. Equilibrium diagram; compound and each metal completely soluble one in the other when liquid, partially soluble when solid; compound is a transition product, ... 122

94. Constitutional diagram for alloys of Fig. 93, ... 124

95. Equilibrium diagram for antimony-tin alloys (●, Reinders; ○, Williams; □, Gallagher), ... 125

96. Antimony-tin alloy, containing 45 per cent. of tin, chill cast, etched with dilute solution of ferric chloride. Bright primary crystals of antimony-rich α-solution, embedded in masses of secondary β, which are surrounded by chilled tin-rich liquid. Magnified 100 diameters, ... 126

97. Same alloy as Fig. 96, slowly cooled, etched with caustic potash. The primary α-crystals are coloured more deeply than the secondary β; the dark material is rich in tin. The alloy is still far from equilibrium. Magnified 100 diameters, ... 127

98. Antimony-tin alloy, containing 55 per cent. of tin, slowly cooled, etched with nitric acid. Bright β (or γ) crystals in tin-rich ground mass. Magnified 100 diameters, ... 128

99. Same alloy as Fig. 98, chill cast, annealed at 250° C. for 42 hours, etched with nitric acid. Nearly uniform γ. Magnified 100 diameters, 128

100. Antimony-tin alloy, containing 80 per cent. of tin, slowly cooled, etched with nitric acid. This is the upper part of the ingot, and shows the flotation of the primary γ-crystals. Magnified 25 diameters, ... 129

101. Same alloy as Fig. 100, chill cast, etched with nitric acid. The bright primary crystals are now distributed with fair uniformity. Magnified 100 diameters, ... 130

102. Equilibrium diagrams; compound and each metal completely soluble one in the other when liquid, completely soluble when solid; compound has a definite melting point:—

(*a*) Melting point of compound is below melting point of both pure metals, ... 131

(*b*) Melting point of compound is above melting point of both pure metals, ... 132

(*c*) Melting point of compound lies between melting points of pure metals, ... 133

103. Equilibrium diagram for magnesium-cadmium alloys (Grube), . 134

104. Equilibrium diagram; compound and each metal partially soluble one in the other when liquid, completely insoluble when solid, the melted compound forms two liquids, ... 135

105. Constitutional diagram for alloys of Fig. 104, ... 136

106. Equilibrium and constitutional diagram; compound and each metal partially soluble one in the other when liquid, partially soluble when solid; the melted compound forms two liquids, . . . 138

107. Equilibrium and constitutional diagram; compound and each metal completely insoluble one in the other when liquid, completely insoluble when solid; compound has a definite melting point, ... 139

108. Equilibrium diagram for lead-tin alloys (●, Rosenhain and Tucker; ○, Degens). 143

FIG. PAGE
109. Typical equilibrium diagram for a system of alloys which crystallise as an unbroken series of solid solutions, but suffer a subsequent transition with formation of an eutectoid, ... 145
110. Diagram illustrating the formation of an eutectoid in certain iron-carbon alloys, ... 147
111. Part of equilibrium diagram for copper-aluminium alloys, . . 147
112. Copper-aluminium alloy, containing 10 per cent. of aluminium, etched with acid ferric chloride. Growth of light α along cleavage directions of primary dark β. Magnified 25 diameters, . . 148
113. Copper-aluminium alloy, containing 12·5 per cent. of aluminium, etched with acid ferric chloride. Growth of light α and dark γ particles within original grain of β. Magnified 100 diameters, . 149
114. Copper-aluminium alloy, containing 14·8 per cent. of aluminium, [illegible] ferric chloride. Growth of dark γ in light β. [illegible] 149
115. [illegible] and Tammann), 150
116. Part of equilibrium diagram for copper-tin alloys, ... 152
117. Copper-tin alloy, containing 65·5 per cent. of copper, chilled at 690° C., etched with acidified ferric chloride. Bars of Cu_3Sn beginning to grow in previously uniform γ. Magnified 18 diameters (Heycock and Neville), ... 153
118. Same alloy as that of Fig. 117, chilled at 495° C. Alternate bars of white δ and dark Cu_3Sn, with intermediate masses of a complex mixture of these constituents. Magnified 45 diameters (Heycock and Neville), ... 153
119. Copper-tin alloy, containing 61·6 per cent. of copper, slowly cooled, etched with acidified ferric chloride. Interfering crystal grains of Cu_3Sn. Magnified 18 diameters (Heycock and Neville), . . 154
120. (*a*) Cooling curves for pure substance solidifying (1) when nuclei are introduced, (2) when the liquid is stirred, (3) when allowed to cool undisturbed.
(*b*) Cooling curves for eutectiferous mixture under similar conditions. 165
121. Typical equilibrium diagram, showing regions within which the liquid phase is stable, metastable, and labile, respectively, . . 166
122. Equilibrium diagram for zinc-antimony alloys (○, Zemczuzny; ●, Curry), ... 170
123. Zinc-antimony alloy, containing 78·5 per cent. of antimony, etched with nitric acid. The alloy was allowed to cool without the introduction of any nuclei of the stable compound ZnSb; it consists of bright unstable primary crystals of antimony in an unstable eutectic mixture of [illegible] (Zemczuzny), . . 172
124. Same alloy as that of Fig. 123, [illegible] acid. The solidifying liquid was inoculated with ZnSb, and the alloy now shows dark primary crystals of the stable compound ZnSb, surrounded by a stable eutectic mixture of ZnSb and antimony (Zemczuzny), . 173
125. Changes in the apparent form of an equilibrium diagram due to rapid cooling of alloys, ... 174
126. Different methods of plotting cooling curves, ... 176
127. Simple crystal forms of the isometric system. (*a*) Octahedron, (*b*) cube, (*c*) rhombic dodecahedron, (*d*) cubo-octahedron. The crystal axes are shown dotted, ... 183
128. Simple crystal forms of the hexagonal system. (*a*) Double hexagonal pyramid, (*b*) rhombohedron formed by suppression of one-half of the faces of (*a*)—an illustration of hemihedrism, . . . 184
129. Octahedral cleavages as they appear upon a section plane (*a*) parallel to an octahedral face, (*b*) cutting six faces irregularly, (*c*) parallel to one axis and one edge of the octahedron—that is,

FIG.

parallel to a dodecahedral face—(*d*) parallel to two octahedral axes—that is, to a cubic face—(*e*) cutting four faces irregularly,

130. (*a*) Crystal skeleton of lead. Magnified 20 diameters,
(*b*) Fern-like crystal skeletons of zinc. Magnified 20 diameters,

131. Crystal skeleton of bismuth. Magnified 7 diameters,

132. Crystal aggregate of bismuth. Magnified 8 diameters,

133. Part of rectangular dendrite on surface of nearly pure aluminium. Magnified 20 diameters,

134. grain of bismuth, showing that it is an aggregation of small crystals of geometric form. Magnified 5 diameters,

135. Wrought iron, deeply etched with chromic acid. Square, triangular, and trapezoidal corrosion figures. Magnified 300 diameters,

136. Cast copper, deeply etched with nitric acid. Square corrosion figures. Magnified 650 diameters,

137. Copper-antimony alloy, containing 76 per cent. of antimony, slowly cooled, etched with nitric acid. The white particles of antimony in the eutectic have approximately their true crystal form, and are in parallel orientation. Magnified 100 diameters,

138. Bismuth-tin eutectic alloy, slowly cooled, etched with nitric acid. The orientation of the particles is determined chiefly by the bismuth. Magnified 75 diameters,

139. Surface of ingot of pure tin, showing radial formation. Magnified 10 diameters,

140. Lead-tin eutectic, without excess of either metal. Junction of two grains. Magnified 300 diameters (Rosenhain and Tucker),

141. Lead-tin eutectic, with slight excess of tin. Junction of three grains. Magnified 300 diameters (Rosenhain and Tucker),

142. Bismuth-tin eutectic, chill cast from 290° C., etched with nitric acid. The right-hand portion was in contact with the chill mould, and shows abundant primary skeletons of tin; these decrease in quantity towards the inside of the piece, where cooling was less diameters,

143. of lead on surface of lead-bismuth alloy containing 20 per cent. of bismuth. The irregular outline of each grain can be traced. Magnified 20 diameters,

144. Skeleton crystal of bismuth from lead-bismuth alloy containing 80 per cent. of bismuth. (*a*) Surface of ingot, not etched, (*b*) section about $\frac{1}{2}$ inch below (*a*), etched with nitric acid. Magnified 25 diameters,

145. 60 per cent. of aluminium, the liquid poured off. Long intersecting bars of size,

146. Composite ingot obtained by superposing liquid antimony on liquid tin, etched with perchloride of iron. Magnified 50 diameters (Le Gris),

147. Pure zinc, cast in a cylindrical mould, etched with hydrochloric acid. Columnar type of structure. Magnified 10 diameters,

148. Diagrams showing the distribution of sulphur and phosphorus in an ingot of mild steel (Talbot and Bauerman),

149. Transverse section of a drawn bar of light aluminium alloy, not etched, showing segregated core. Magnified 2 diameters,

150. Dendrite on surface of pure tin, showing the manner in which the cellular structure interferes with the form of the crystal skeleton. Magnified 20 diameters,

151. Cellular structure on surface of pure lead ndaries, meeting at a point within one of the visible. Magnified 300 diameters,

FIG. PAGE

152. Peculiar surface formation of zinc-iron alloy taken from a galvanising bath, probably due to eddies in the liquid. Magnified 1½ diameters, 213
153. Copper-tin-lead alloy, containing 10 per cent. of tin and 2 per cent of lead, chill cast, etched with ammonia. The curvature of many of the crystal skeletons is probably due to the currents set up during pouring. Magnified 50 diameters, ... 214
154. Extremity of a dendrite of lead, showing the effect of surface tension in rounding the crystal angles. Magnified 20 diameters, . . 215
155. Mild steel sheet of coarse structure, heated at its upper end to about 1,000° C. The fine-grained region in which the transition temperature has been exceeded is sharply divided from the unchanged coarse-grained region. Two-thirds natural size (Stead). 217
156. Copper-tin alloy, containing 84·4 per cent. of copper, very slowly cooled to 546° C., and then chilled, etched with acidified ferric chloride. Dark secondary β filling the spaces between half tone areas of primary α, which are bordered with white δ. Magnified 280 diameters (Heycock and Neville), ... 218
157. Same alloy as that of Fig. 156, very slowly cooled to 470° C., and then chilled. The dark primary α-crystals are surrounded by a thick border of white δ, and the ground [illegible] consists of the (α + δ) eutectoid. Magnified 280 [illegible] and Neville), . . . 219
158. Copper-tin alloy, containing 76·7 per cent. of copper, slowly cooled to 675° C., and then chilled, etched with acidified ferric chloride. Incipient decomposition of the uniform β-solution. Magnified 18 diameters (Heycock and Neville), ... 220
159. Same alloy as that of Fig. 158, very slowly cooled to 600° C., and then chilled. The transition is in a more advanced stage, and the striations have disappeared from regions where α is well developed. Magnified 18 diameters (Heycock and Neville), . 221
160. Same alloy as that of Fig. 158, chilled at 530° C. The transformation is nearly complete, and only a few faint striations are left. Magnified 18 diameters (Heycock and Neville), ... 221
161. Meteoric iron from Tazewell, etched with nitric acid. Magnified 10 diameters (Sorby), ... 222
162. Copper-aluminium alloy, containing 12 per cent. of aluminium, chill cast, etched with nitric acid. Striated grains of β-solution. Magnified 25 diameters, ... 222
163. Copper-tin alloy, containing 71 per cent. of copper, chilled at 734° C. Transformation of β to γ in progress. Magnified 18 diameters (Heycock and Neville), ... 224
164. Tool steel, burnt, etched with nitric acid. The metal is cracked along the boundaries of the coarse grains of the transformed γ-solution. Oxidation is revealed by the ferrous oxide lining the cracks, and by the needles of ferrite which pass from the outside towards the centre of each grain. Magnified 100 diameters, . 229
165. German silver sheet, annealed at too high a temperature, etched with chromic acid. The metal shows signs of incipient melting at the granular boundaries and at isolated spots within each grain. Magnified 100 diameters, ... 230
166. Longitudinal section of steel wire, containing 0·75 per cent. of carbon, after 15th pass. Magnified 100 diameters (Brunton), . 232
167. Copper-tin-lead alloy, containing 10 per cent. of tin and 2 per cent. of lead, hammered, etched with ammonia. The primary crystal skeletons are considerably distorted. Magnified 100 diameters, . 232
168. Cast tool steel, severely cold-hammered, etched with nitric acid. The network of brittle Fe_3C is much broken. Magnified 100 diameters.

FIG. PAGE
169. Drawn copper, squeezed in vice. Irregular granular boundaries and straight slip bands. Magnified 200 diameters, ... 234
170. Aluminium, subjected to severe tension. Straight and curved slip bands. Magnified 200 diameters, ... 234
171. Crystal of pure bismuth, fractured along basal plane, showing cleavage markings as short sloping surfaces. Oblique illumination. Magnified 20 diameters, ... 235
172. Sectional view of slip bands in soft sheet steel. The lower part is the steel, the upper part being a protective layer of deposited copper. Magnified 2,000 diameters (Rosenhain), ... 236
173. Wrought iron, squeezed in vice. Curved and branching slip bands. Magnified 300 diameters, ... 237
174. Cast zinc, slightly bent, etched with hydrochloric acid. Columnar crystals showing Neumann's lamellæ. Magnified 100 diameters, . 238
175. Nickel-manganese steel, containing 19·91 per cent. of nickel, 0·96 per cent. of manganese, and 0·41 per cent. of carbon, subjected to torsion. The transformation of the metal is the more complete as the extent of the deformation is greater. Magnified 85 diameters (Carpenter, Hadfield, and Longmuir), ... 239
176. Transverse section of cold-reeled brass bar, annealed, etched with chromic acid. Coarsely granular envelope surrounding core of unchanged structure. Magnified 20 diameters, ... 241
177. Rolled copper, annealed at 800° C. for five minutes, etched with chromic acid. Twinned crystals. Magnified 100 diameters, . 242
178. Pure bismuth, annealed, polished, etched with nitric acid. Fine-grained structure of surface layer. Magnified 100 diameters, . 244
179. Same specimen as that of Fig. 178, lightly polished and etched alternately many times. The altered surface film has been nearly removed, and the true coarse structure of the metal is apparent. Magnified 100 diameters, ... 245
180. Equilibrium diagram for copper-tin alloys (●, Roberts-Austen and Stansfield; ○, Heycock and Neville; ■, Shepherd and Blough, 249
181. Copper-tin alloy, containing 96·3 per cent. of copper, chilled from 1,025° C., etched with acidified ferric chloride. Large primary α-crystals and chilled liquid. Magnified 45 diameters (Heycock and Neville), ... 250
182. Copper-tin alloy, containing 92·8 per cent. of copper, very slowly cooled to 775° C., and then chilled, etched with a solution of bromine in hydrochloric acid. Non-uniform grains of α showing skeleton cores. Magnified 18 diameters (Heycock and Neville), . 251
183. Copper-tin alloy, containing 79·7 per cent. of copper, slowly cooled to 805° C., and then chilled, etched with acidified ferric chloride. Light primary skeletons of α in ground mass of chilled liquid. Magnified 18 diameters (Heycock and Neville), ... 252
184. Same alloy as that of Fig. 183, very slowly cooled to 775° C., and then chilled, etched with acidified ferric chloride. Light primary α, partly dissolved, in striated ground mass of β. Magnified 18 diameters (Heycock and Neville), ... 252
185. Copper-tin alloy, containing 77·5 per cent. of copper, not very slowly cooled, chilled at 765° C., etched with acidified ferric chloride. Primary α-crystals surrounded by envelopes of β. Magnified 18 diameters (Heycock and Neville), ... 253
186. Copper-tin alloy, containing 77·5 per cent. of copper, slowly cooled to 558° C. and then chilled. Exudation of α-crystals from uniform β-solution. Magnified 18 diameters (Heycock and Neville), . . 254
187. Copper-tin alloy, containing 72·4 per cent. of copper, cooled rapidly through transition temperature, and chilled at 731° C., etched with

FIG. PAGE

acidified ferric chloride. Primary β-crystallites. Magnified 18 diameters (Heycock and Neville), ... 255

188. Copper-tin alloy, containing 72·4 per cent. of copper, slowly cooled to 495° C. and then chilled. Dendritic δ-crystals commencing to separate from solid uniform γ-solution. Magnified 45 diameters (Heycock and Neville), ... 256

189. Copper-tin alloy, containing 69·6 per cent. of copper, etched with acidified ferric chloride. Transformation carried further than in Fig. 188, but still incomplete. Magnified 45 diameters (Heycock and Neville), ... 256

190. Copper-tin alloy, containing 59·2 per cent. of copper, slowly cooled to 565° C., and then chilled, etched with acidified ferric chloride. Change of primary uniform γ-crystals to mixture of Cu_3Sn and liquid. The liquid is represented by the black lines and dots. Magnified 18 diameters (Heycock and Neville), ... 257

191. Copper-tin alloy, containing 34·9 per cent. of copper, annealed at 380° C. for 10 hours, etched with acidified ferric chloride. Primary bars of Cu_3Sn surrounded by light envelopes of ε in a dark tin-rich matrix. Magnified 18 diameters (Heycock and Neville), . . 258

192. Same alloy as that of Fig. 191, annealed at 350° C. for 21 days. Light globules of ϵ in dark tin-rich matrix. Magnified 18 diameters. (Heycock and Neville), ... 259

193. Copper-tin alloy, containing 5·6 per cent. of copper, slowly cooled, etched with acidified ferric chloride. Primary bars of ϵ in eutectic mixture of ϵ and tin. Magnified 45 diameters (Heycock and Neville), 259

194. Bronze coin, etched with chromic acid. Twins and shadowy flow markings. Magnified 100 diameters, ... 262

195. Same coin as that of Fig. 194, heated to 800° C. for one minute, etched with chromic acid. The size of the twin crystals has increased and the flow markings have disappeared. Magnified 100 diameters, 262

196. Cast phosphor-bronze, cut from bearing, etched with ammonia. Primary copper-rich skeletons in ground mass of complex structure. Magnified 100 diameters, ... 266

197. Equilibrium diagram for copper-zinc alloys (●, Roberts-Austen; ○, Tafel; □, Shepherd; ■, Carpenter and Edwards), . . . 267

198. [illegible] containing 30 per cent. of zinc, chill cast, etched [illegible] id. Skeleton α-crystals in zinc-rich ground mass. Magnified 25 diameters, ... 268

199. Copper-zinc alloy, containing 30 per cent. of zinc, severely drawn and then annealed, etched with chromic acid. Twinned crystals of α. Magnified 100 diameters, ... 268

200. Copper-zinc alloy, [illegible] 37 [illegible] of zinc, chilled at 700° C., etched with chror [illegible] α and dark β. Magnified 25 diameters, ... 269

201. Same alloy as that of Fig. 200, slowly cooled, etched with chromic acid. The α-crystals have grown at the expense of the β, and now form most of the mass. Magnified 25 diameters, ... 270

202. Copper-zinc alloy, containing 44 per cent. of zinc, slowly cooled, etched with chromic acid. Primary grains of β showing commencement of growth of α at top of ingot. Magnified 25 diameters, . 270

203. Copper-zinc alloy, containing 54 per cent. of zinc, slowly cooled, etched with chromic acid. Light secondary crystallisation of γ in dark matrix of β. Magnified 25 diameters, ... 271

204. Same alloy as that of Fig. 203, heated to 800° C. and quenched in water. The γ-crystals are partly dissolved, but most of the original network remains, within which may be seen the smaller grains of recrystallised β. Magnified 25 diameters, ... 271

FIG. PAGE

205. Copper-zinc alloy, conntaining 68 per cent. of zinc, slowly cooled, etched with chromic acid. Incipient decomposition of γ-grains along the cleavages and granular boundaries Magnified 25 diameters, ... 273

206. Copper-zinc alloy, containing 76 per cent. of zinc, slowly cooled, etched with nitric acid. Growth of dark ϵ in light δ. Magnified 100 diameters, ... 273

207. Copper-zinc alloy, containing 89 per cent. of zinc, slowly cooled, etched with chromic acid. Light ϵ in dark η. Magnified 25 diameters, ... 274

208. Copper-zinc-tin alloy, containing 54 per cent. of copper, 43 per cent. of zinc, and 3 per cent. of tin, slowly cooled, etched with chromic acid. Hard white constituent in yellow ground mass. Magnified 100 diameters, ... 278

209. Delta metal bar, longitudinal section, etched with iodine. Grains of β-solution of copper-zinc, and round spots of an iron-zinc solution or compound. Magnified 100 diameters, ... 279

210. Equilibrium diagram for copper-aluminium alloys (●, Carpenter and Edwards; ○, Curry; □, Gwyer), ... 281

211. Transverse section of drawn bar of aluminium-bronze, containing 10 per cent. of aluminium, etched with acidified ferric chloride. Some of the light α-grains show turn markings. Magnified 100 diameters, ... 282

212. Equilibrium diagram for copper-phosphorus alloys (Heyn and Bauer), ... 284

213. Equilibrium diagram for copper-silicon alloys (Rudolfi), ... 284

214. Equilibrium diagram for copper-arsenic alloys (○, Friedrich; ●, Bengough and Hill), ... 286

215. Copper-arsenic alloy, [illegible] ut 21 per cent. of arsenic, slowly cooled, etche[illegible] copper-ammonium chloride. The upper part shows primary skeletons of α, and the lower part primary skeletons of β; in the middle is a layer of pure eutectic which has crystallised in dendritic forms. Magnified 10 diameters, ... 287

216. Same alloy as that of Fig. 215, upper part. Primary α-crystals in ground mass of first eutectic. The cracks avoid the α-crystals. Magnified 100 diameters, ... 287

217. Same alloy as that of Fig. 215, lower part. Primary β in first eutectic. The cracks cross the β-crystals. Magnified 100 diameters, 288

218. Copper-arsenic alloy, containing 42 per cent. of arsenic, slowly cooled, etched with nitric acid. Primary γ in second eutectic. The striations on the γ-crystals indicate incipient transition. The bent outline of the crystal skeleton and the curious hollow formation beneath it are noticeable. Magnified 100 diameters, . 289

219. Equilibrium diagram for copper-oxygen alloys (Heyn), ... 289

220. Fused copper, containing 0·2 per cent. of oxygen, not etched. Primary grains of copper in eutectic mixture of copper and cuprous oxide. Magnified 100 diameters, ... 290

221. Part of cooling curve of nearly pure electro-deposited iron (Roberts-Austen), ... 293

222. Proposed equilibrium diagram for iron-carbon alloys (●, Roberts-Austen; Roozeboom), ... 296

223. Propo[illegible] for iron-carbon alloys (●, Carpenter and [illegible] 297

224. Propo[illegible] for iron-carbon alloys (○, Charpy; □, Mannesmann; ●, Charpy and Grenet; ■, Royston), . . 298

225. Proposed equilibrium diagram for iron-carbon alloys (Upton), . 300

FIG. PAGE
226. Probable (incomplete) equilibrium diagram for iron-carbon alloys (●, Goerens and Meyer), ... 303
227. Wrought-iron bar, longitudinal section, not etched. Threads of slag in the metal. Magnified 100 diameters, ... 305
228. Wrought-iron bar, transverse section, etched with chromic acid. Polygonal grains of iron of varying degrees of brightness, and dark patches of slag. Magnified 100 diameters, ... 306
229. Section of soft mild steel plate, etched with picric acid. Dark areas of pearlite in ground mass of ferrite. Magnified 100 diameters, . 307
230. Section of steel rail, etched with picric acid. Ferrite and pearlite closely intermingled. Magnified 100 diameters, ... 308
231. Pearlite, etched with ammonium nitrate. Magnified 650 diameters, 309
232. Steel, containing 0·5 per cent. of carbon, heated to 850° C. and quenched in water, etched with nitric acid. Incipient decomposition of γ-solution giving striated mass of martensite. Magnified 300 diameters, ... 310
233. Section of steel axle, containing 0·35 per cent. of carbon. Magnified 120 diameters (Jenkins), ... 311
234. Section of tool steel, etched with nitric acid. Grains of pearlite surrounded by network of cementite. Magnified 100 diameters, . 312
235. Radial fracture of chilled roll, showing gradual change from white iron to grey. Natural size, ... 315
236. White cast iron, etched with picric acid. Primary skeletons of γ-solution transformed to sorbitic pearlite, in ground mass of γ-Fe_3C eutectic. Magnified 100 diameters, ... 315
237. Section of grey cast iron, not etched, showing thin curved plates of graphite. Magnified 100 diameters, ... 316
238. Grey cast iron, etched with iodine. The plates of graphite are enveloped in ferrite; most of the dark areas represent pearlite, and the interstices are filled with phosphide eutectic. Magnified 100 diameters, ... 317
239. Grey cast iron, from same piece as Fig. 237, etched with picric acid. Original γ-skeleton invaded by subsequent growth of graphite. Magnified 50 diameters, ... 317
240. Mottled cast iron, etched with picric acid. On the right is a clump of graphite enveloped in sorbitic pearlite; on the left the metal is white iron. Magnified 100 diameters, ... 318
241. Malleable casting, near outer edge, etched with ammonium nitrate. White ferrite and dark pearlite. Magnified 100 diameters, . . 319
242. Malleable casting, inner zone, etched with ammonium nitrate. Laminated pearlite, with rounded masses of separated graphite, a little free ferrite, and some globules of manganese sulphide. Magnified 100 diameters, ... 320
243. Same as Fig. 242. Magnified 250 diameters, ... 320
244. Structural diagram for nickel steels (Guillet), ... 323
245. Nickel steel, containing 25 per cent. of nickel and 0·8 per cent. of carbon, etched with picric acid. Crystal grains of γ-solution, showing twins and cleavage markings. Magnified 200 diameters (Guillet), ... 323
246. Nickel steel, containing 15 per cent. of nickel and 0·8 per cent. of carbon, distorted, etched with picric acid. Growth of new constituent along cleavages as a result of the strain. Magnified 300 diameters (Guillet), ... 324
247. Nickel steel, containing 15 per cent. of nickel and 0·8 per cent. of carbon, cooled to — 40° C., etched with picric acid. Transformation of previously uniform γ-solution. Magnified 300 diameters (Guillet), ... 324

FIG. PAGE
248. Structural diagram for manganese steels (Guillet), ... 326
249. ,, ,, chromium steels (Guillet), ... 326
250. ,, ,, tungsten steels (Guillet), ... 327
251. Tungsten steel, containing 27·8 per cent. of tungsten and 0·28 per cent. of carbon, etched with picric acid. White spots of a complex carbide of iron and tungsten. Magnified 200 diameters (Guillet), 327
252. Structural diagram for molybdenum steels (Guillet), . . . 328
253. ,, ,, vanadium steels (Guillet), ... 329
254. ,, ,, silicon steels (Guillet), ... 329
255. Equilibrium diagram for iron-nickel alloys (○, Osmond; ●, Dumas; □, Guertler and Tammann; ■, Ruer and Schuz), . . . 331
256. Equilibrium diagram for [illegible] and Tammann), 332
257. ,, ,, [illegible] Tammann), 333
258. ,, ,, iron-copper alloys (Sahmen), . . . 334
259. Iron-copper alloy, containing 10 per cent. of copper, heat tinted. Variation in composition of the primary crystallites, due to rapid cooling; the dark parts are richer in copper and the light parts richer in iron. Magnified 100 diameters (Stead), . . . 335
260. Iron-copper alloy, containing 7·5 per cent. of copper, not etched. Primary iron-[illegible]-rich ground mass. Magnified 100 diameters (Stead), ... 335
261. Equilibrium diagram for iron-zinc alloys (○, v. Vegesack; ●, Wologdine), ... 336
262. Impure zinc from galvanising bath, top crust, etched with hydrochloric acid. The lower part is very friable, and consists chiefly of [illegible] well-defined angles. Magnified 20 diameters, . 337
263. [illegible] of composition for ternary alloys, . . . 340
264. [illegible] proportion of two metals in a ternary system, . 341
265. Typical equilibrium solid for ternary system, ... 342
266. Surface of equilibrium solid for ternary system of Fig. 265, represented by contour lines, ... 344
267. Binary eutectic surface for ternary solid of Fig. 265, . . . 345
268. Binary eutectic surface of Fig. 267, represented by contour lines, . 346
269. Part of constitutional solid for ternary system of Fig. 265, . . 347
270. Constitutional diagrams for alloys of Fig. 265; liquid metals completely soluble, solid metals completely insoluble in each other, . 349
271. Structural diagram for completely solid alloys of Fig. 265, . . 350
272. Typical cooling curve for ternary alloy, ... 352
273. Constitutional and structural diagrams for ternary system; liquid metals completely soluble, solid metals partially soluble in each other, ... 354
274. Equilibrium solid for lead-tin-bismuth alloys (Charpy), . . . 355
275. Triangular diagram for lead-tin-bismuth alloys, with contour lines to indicate the form of the freezing point surface (Charpy), . . 356
276. Lead-tin-bismuth alloy, containing 15 per cent. of lead, 15 per cent. of tin, and 70 per cent. of bismuth, slowly cooled, etched with nitric acid. Large primary crystal of bismuth, smaller secondary crystals of bismuth and of tin, ground mass of ternary eutectic. Magnified 100 diameters, ... 357
277. Plan of equilibrium solid for a series of ternary alloys in which two liquid layers are formed, showing (*a*) some contour lines of the surface of solubility, and (*b*) some tie-lines, ... 358
278. Isothermal curve of solubility surface, showing limiting point and one tie-line, ... 359
279. Surface of typical equilibrium solid for a series of ternary alloys, some of which separate into two liquid layers. The temperatures are given on the contour lines, ... 360

FIG. PAGE
280. Isothermal at 800° C., and several tie-lines for the silver-lead-zinc alloys (Wright and Thompson), ... 362
281. Constitutional and structural diagrams for ternary system; liquid metals and binary compound completely soluble, solid metals and compound completely insoluble in each other, ... 363
282. Constitutional and structural diagrams for ternary system; liquid metals and binary compound completely soluble, solid metals and compound partially soluble in each other, ... 365
283. Equilibrium diagrams for the binary systems copper-zinc, copper-nickel, and zinc-nickel, and for the ternary system copper-zinc-nickel (Tafel), ... *face page* 365
284. Constitutional diagram for partly solidified copper-zinc-nickel alloys, ... 366
285. Constitutional diagram for just solid copper-zinc-nickel alloys, . 367
286. German silver, containing 66·7 per cent. of copper, 20 per cent. of zinc, and 13·3 per cent. of nickel. Grains of α-solution with faint skeleton markings. Magnified 100 diameters (Tafel), . . 368
287. German silver, containing 53·3 per cent. of copper, 26·7 per cent. of zinc, and 20 per cent. of nickel. Primary α-skeletons in zinc-rich matrix. Magnified 100 diameters (Tafel), ... 368
288. German silver, containing 7·4 per cent. of copper, 18·3 per cent. of zinc, and 74·3 per cent. of nickel. Non-uniform α-solution with zinc-rich inclusions. Magnified 100 diameters (Tafel), . . . 369
289. German silver, containing 53·3 per cent. of copper, 40 per cent. of zinc, and 6·7 per cent. of nickel. Light α and dark β. Magnified 100 diameters (Tafel), ... 369
290. German silver, containing 27 per cent. of copper, 52·8 per cent. of zinc, and 20·2 per cent. of nickel. Pure β-crystals. Magnified 80 diameters (Tafel), ... 370
291. German silver, containing 27·3 per cent. of copper, 59·1 per cent. of zinc, and 13·6 per cent. of nickel. Growth of new constituent within solid β-solution. Magnified 100 diameters (Tafel), . . 370
292. German silver sheet, rolled and annealed, etched with chromic acid. Twinned crystals of α-solution. Magnified 100 diameters, . . 371
293. Babbit metal, containing 88·9 per cent. of tin, 7·4 per cent. of antimony, and 3·7 per cent. of copper, slowly cooled, etched with nitric acid. Skeleton network of copper-tin ε-solution, white crystals of antimony-tin γ-solution, tin-rich ground mass. Magnified 100 diameters, ... 373
294. Bearing metal, containing 79·7 per cent. of lead, 14·5 per cent. of antimony, and 5·8 per cent. of tin, slowly cooled, etched with nitric acid. The white crystals of t[illegible] γ-solution have floated to the top of the ingot. [illegible] meters, . 374
295. Same alloy as that of Fig. 294, quickly cooled, etched with nitric acid. The γ-crystals are much smaller and are distributed with fair uniformity. Magnified 100 diameters, ... 375
296. Bearing metal, containing 65·6 per cent. of lead, 24·3 per cent. of antimony, and 10·1 per cent. of copper, slowly cooled, etched with nitric acid. Skeletons of purple $SbCu_2$, white crystals of antimony, ground mass of eutectic. Magnified 100 diameters, . 375
297. Constitutional diagrams for ternary system; liquid metals and ternary compound completely soluble, solid metals and compound [illegible]ble in each other, ... 376
298. [illegible] for ternary system of Fig. 297, . . . 377
299. Fracture of [illegible] hook, showing coarsely crystalline envelope [illegible] core. Natural size, . . . 383
300. Wrought-iron bar, transverse section, not etched. The slag consists

FIG. PAGE

of light primary crystals of ferrous oxide in a ground mass of darker ferrous silicate. Magnified 100 diameters, ... 385

301. Transverse section of fractured steel counter-shaft, etched with iodine, showing segregated core. Three-fourths natural size, . 386

302. Test piece cut from segregated counter-shaft of Fig. 301. Natural size.

(*a*) Elevation of one of broken parts, showing fracture, and surface defect due to a hard seam in the metal.

(*b*) Transverse section, showing location of hard seams, ... 387

303. Phosphoric cast-iron from commutator disc, etched with nitric acid. Large crystals of graphite embedded in dark pearlite, which is nearly surrounded by white speckled areas of phosphide eutectic. Magnified 100 diameters, ... 389

304. Bronze containing 10 per cent. of tin and 2 per cent. of lead, slowly cooled, etched with ammonia. The lead is represented by the small dark spots distributed irregularly over the section. Magnified 100 diameters, ... 390

305. Fracture of test piece cut from reputed steel bolt, really coarsely crystalline wrought iron. Magnified 2 diameters, ... 392

306. Transverse section of bolt of Fig. 305, etched with chromic acid, showing coarse crystal grains and evidence of piling. Magnified 2 diameters, ... 392

307. Section through (*a*) machine closed and (*b*) hand closed rivets (Clark), 394

308. Two steel plates joined with welding bar of wrought iron, etched with iodine. Natural size, ... 394

309. Section taken across weld of Fig. 308, showing iron above and steel below, and slag in the joint. Magnified 100 diameters, . 395

310. Section across soldered joint of two pieces of copper, etched with ammonia. The solution of the tin in the copper is indicated by the light unattacked border along each side of the joint. Magnified 100 diameters, ... 396

METALLIC ALLOYS.

CHAPTER I.

METHODS OF INVESTIGATION.

Introduction—Preparation of Specimens for Microscopic Examinatio
Microscope—Pyrometer—Furnaces—Preparation of Alloys.

1. **Introduction.**—The art of mixing metals has been practised
some hundreds, or, perhaps, thousands of years, but it is o
during the last quarter of a century that these metallic mixtu
or alloys have been examined in a systematic manner. The rea
for this is partly that the study of mixtures of substances has b
established on a satisfactory basis only recently, and partly beca
the alloys of greatest industrial importance are those of grea
complexity, and offer most difficulties to investigation. The all
of copper with tin and with zinc—the bronzes and the brasse
form long series of metals of varying constitution and propert
the study of which is far from complete. The alloys of iron v
other metals, and with carbon, of more commercial importa
than the copper alloys, form series of even greater complexity
which, although a very large amount of work has been devoted
their investigation, our knowledge is in a still less satisfactory st

Many methods of studying metallic alloys, by means of t
various physical and chemical properties, have been practi
from time to time, but the most fruitful results have b
obtained by considering alloys as solutions of metals in each ot
The more useful instruments for examining these metallic soluti
are the thermometer or pyrometer, and the microscope. By me
of the pyrometer the melting, freezing, and other critical temp
tures of an alloy are determined, and the microscope reveals
minute structure of the metal. The two instruments used
conjunction give valuable information as to the changes of strüc
and constitution which accompany changes in the temperat
and in the composition of the metallic mixture.

The use of the microscope as a means of studying metals
initiated about forty-five years ago, by Dr. Sorby, of Sheffield[1],

the same idea occurred almost simultaneously to others, notably Prof. Martens of Berlin,[2] and M. Osmond of Paris.[3] The work of these three pioneers was very carefully carried out, and the results of their investigations of the microscopic structure of iron and steel remain as valuable to-day as when made, but they revealed only a few isolated facts in a complicated subject, and it was long before any attempt to reduce them to some sort of order was successful. It would be interesting to follow the gradual evolution of ideas on the nature of alloys, but it is more profitable to consider the present position of our knowledge. The Reports of the Alloys Research Committee of the Institution of Mechanical Engineers,[4] and the various discussions thereon, may be recommended as giving an excellent short history of the subject.

2. **Preparation of Specimens for Microscopic Examination.**—To prepare a sample of metal for microscopic examination is not usually a difficult matter. It is quite impracticable to grind a specimen so thin as to be capable of transmitting light, so that the structure of the piece must be examined by means of light reflected from its surface; for this purpose the surface requires to be highly polished. If the metal is one of medium hardness—for instance, grey cast iron, wrought iron, mild steel, or brass—a small piece may be cut off with a hack-saw, and filed flat on one face. If the metal is too hard to saw or to file—for instance, hardened steel or white cast iron—a piece must be broken off with a hammer or chisel, and ground to a flat face by means of an emery wheel. When the metal is very soft—for instance, lead, tin, and their alloys—a file clogs unless well chalked or oiled; a nearly flat surface may be obtained by employing a sharp paring tool, such as an ordinary wood chisel or plane.

For ordinary purposes the specimens should be about $\frac{3}{8}$ inch square and $\frac{1}{8}$ inch thick; if the surface is much larger than $\frac{3}{8}$ inch square, the polishing process becomes tedious, and, if the pieces are much smaller than the given dimensions, they are inconvenient to hold when polishing by hand. The two opposite faces of the specimen should be made approximately parallel, but time may be saved by leaving the metal quite rough except on the face to be examined, and, if necessary, the piece may be left as large as the microscope will allow. A specimen cut from a thin sheet requires to be cemented to a thicker supporting block, or fixed edgewise in a slot sawn in the block, and a thin wire should be inserted tightly into a hole drilled in a larger piece in order to be polished. In many cases it is advisable to cut three mutually perpendicular sections from the piece to be examined

After a flat surface has been obtained on the specimen, this surface must be ground by gently rubbing the metal upon sheets of emery paper stretched over hard wood or plate glass; the finest

French emery paper, as used by watchmakers, is the most suitable material which can be obtained commercially. The specimen is rubbed first on a sheet of No. 1 grade, then on No. 0, and then on No. 00; the papers finer than No. 00 grade often contain gritty particles, and are unsatisfactory unless of the best make. The metal is rubbed on the first paper so that the scratches caused by the emery grains cross, more or less nearly at right angles, the marks left by the file; the rubbing is continued until the file marks have been obliterated. The second paper is then used, the direction of rubbing being approximately at right angles to that for the first paper, and the work is continued until the scratches left by the first paper have been removed by the second, and so on. Care must be taken during grinding to press upon the specimen as lightly as possible, since the process causes an alteration in the surface layer of metal, and the thickness of this altered layer is increased by using heavy pressure; the alteration is due jointly to the tearing and dragging action of the emery grains, and to the heating of the surface layer. With soft metals it is necessary that the pressure be extremely light, and the emery paper should be lubricated with some thin oil.

When the grinding process has been completed the specimen must be polished. This is done generally upon stout cloth stretched over a piece of hard wood, the wood having been previously soaked in hot paraffin wax. The cloth is covered with the finest rouge, or with the "diamantine" powder used by jewellers, and is kept moistened with water. It is at first advisable to continue the polishing until all emery scratches have disappeared, but after some experience in microscopic examination has been gained a less perfect polish will be found sufficient for many purposes; in fact, if the subsequent etching is performed judiciously, the final polishing process is often unnecessary. To obtain the best results, especially for high magnifications, and for any new investigations, the utmost care should be taken in polishing the metal, and only the finest polishing powders should be used.

There are a number of small machines on the market which lessen the labour of the grinding and polishing processes. Each consists essentially of a disc which can be rotated by hand or by foot, or, in the case of the larger machines, by power. A small block of wood is attached to the disc, and to this a piece of emery paper or of cloth is fixed. The specimen is pressed lightly by the fingers against the polishing block while it rotates. In some machines an arrangement is provided for holding the pieces which are being polished.[5]

After the specimen is polished it has generally to be submitted to a further treatment, in order that its structure may be distinguished more clearly. The usual method is to etch the metal by

simple immersion in a dilute solution of an acid, or other chemical reagent. The different constituents of an alloy, and even the different crystals of a pure metal, are attacked unequally by the etching agent, and the structure of the material is thus partly revealed. The number of these etching agents which may be employed is large, and the best to use in any given case depends upon the nature of the metal; the chief requirements are that the fluid used shall act selectively, so as to differentiate distinctly the several constituents of the metallic mixture, and that it shall act with moderate rapidity. Hydrochloric, nitric, and picric acids, in dilute aqueous or alcoholic solution, ammonia and caustic potash, and tincture of iodine are among those commonly preferred. The time of etching for any particular specimen depends upon the dilution of the reagent, and can be determined only by trial. The metal, after a short attack, should be examined under the microscope, and, as soon as a clearly-defined structure is perceived, the process should be stopped. Sometimes, after the lightly-etched metal has been examined carefully, further information is obtained by subjecting it to a more vigorous attack; in certain cases deep etching is necessary. The intensity of the action required is governed also by the degree of polish imparted to the metal before etching; a [illegible] surface requires a more prolonged attack than one [illegible].

In some alloys there is considerable difference between the hardness of the constituents. Simple polishing leaves the harder material standing in relief above the softer parts, and a structure becomes visible without any chemical treatment. A somewhat similar effect is obtained, even when there is little difference between the hardness of the constituents, if the polishing block is moistened with the etching fluid. Pieces polished in relief, though convenient for low-power examination, are, for obvious reasons, unsuitable where high magnifications are required; in metals of coarse structure they often form magnificent naked-eye specimens.

With very soft metals, for which polishing is difficult and causes a considerable alteration in the surface structure, a process of alternate polishing and etching gives good results.[6] The specimen is polished first with as little pressure as possible, then etched by the reagent chosen, then again lightly polished, then re-etched, and so on. The altered surface layer, due to the original polishing, is gradually removed by the chemical attack, while the succeeding light polishing prevents the rough surface which would be the result of a too vigorous, or too long-continued corrosion; with care, the altered layer becomes so thin as to be removed by the final light etching, and a structure appears which is truly characteristic of the mass of the metal.

Another method of differentiating between the various con-

stituents, which is useful with metals of high melting points—for instance, alloys of iron and alloys of copper—is to heat the specimen until colouration, due to oxidation of the surface, occurs. Examination shows that some constituents oxidise more rapidly than others, and, if the process is stopped at a certain stage, the different constituents appear of different colours.[7]

After the specimen has been etched or oxidised sufficiently, a point which can be determined only by experience, it must be carefully washed. If an acid has been used, the metal should be immersed first in lime-water or dilute ammonia, then held under the tap for a few moments, and dried rapidly; or it may be washed finally with alcohol. If iodine has been used for etching, the specimen should be immersed in alcohol, and left there for an hour or two. These precautions are especially necessary with iron and steel, which otherwise would rust very rapidly, but they are important

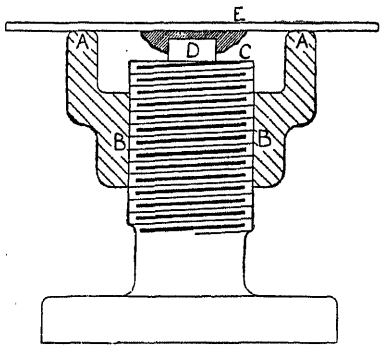

Fig. 1.—Device for mounting specimens.

also with other metals in order to prevent future discolouration of the specimens.

When the piece has been washed thoroughly, it should be mounted temporarily on a glass slide by means of some soft modelling clay or wax, and a levelling stage. The levelling stage, shown in Fig. 1, consists of a circular ring, faced on its upper surface, A, and screwed internally at the part B to fit the foot, of which the upper end, C, is also faced. The ring can be screwed up or down on the foot, so that the distance between the parallel faces, A and C, may be adjusted to suit the thickness of the specimen. To use the levelling stage, the piece of metal, D, is arranged with its prepared face downwards on C, and the glass slide E, on which some clay, shown shaded, has been placed, is laid upon A. The ring is then adjusted until the specimen is partly embedded in the clay, when a light pressure on the glass slide brings this into contact with A, and

parallel with the face of the specimen; by this means it is ensured that the surface to be examined is perpendicular to the optic axis of the microscope.

If the preliminary microscopic examination shows the preparation to be satisfactory, it should be mounted permanently by means of sealing wax, or Canada balsam; but when heating is not permissible, a solution of Canada balsam in benzole may be employed for this purpose. If it is desired to preserve the specimen for some time, the polished surface must be protected. The use of a cover glass attached with Canada balsam, universal for biological preparations, is rather objectionable; a better method is to varnish the surface of the metal with a solution of paraffin wax in benzole, as the wax can be removed easily at any time by wiping with a soft rag dipped in benzole, and is an excellent protective against rust and discolouration.

3. **Microscope.**—The microscope employed for the examination of metals differs little from the usual English or Continental patterns, and need not be described minutely. A very useful improvement is effected by prolonging the limb of the instrument and providing the stage with a rack and pinion motion, so that coarse focussing may be performed without moving the microscope tube. This allows the specimen to be brought into the field of vision without disturbing the illuminating arrangements, and also permits of the examination of pieces of considerable size, frequently a great convenience. A complete mechanical stage with two traversing motions at right angles, and a rotating motion with centring screws is desirable, but not absolutely necessary. The objectives used need not be many, a 1½-inch and a ¼-inch being sufficient for ordinary purposes if the long draw-tube is employed; but a more complete set, including a high-power oil-immersion lens, is required for important work. The objectives should be corrected for the increase in length of tube caused by introducing a vertical illuminator, but they need no correction collar for thickness of cover glass, since the use of cover glasses for metal specimens is unnecessary and undesirable. Three eye-pieces are sufficient, and only one is absolutely necessary. An eye-piece micrometer and a stage micrometer are useful adjuncts to the microscope if measurements are to be made, and also for determining the scale of magnification with accuracy.

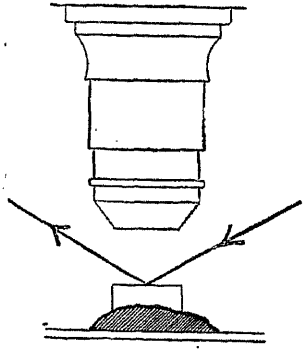

Fig. 2.—Oblique illumination.

The method of illuminating the specimen is important, ar differs entirely from that used for transparent preparations. F low-power work a ray of light is directed obliquely upon tl metallic surface by means of a condenser. The brighter parts the surface which have been attacked very little, or not at al by the etching fluid, reflect the light away from the tube (Fig. 2 and so appear dark to the observer. The parts which are corrode on account of their rough surface, cause scattering of the ligh to take place, with the result that some of the scattered ray pass up the microscope tube, and these parts of the specime appear relatively bright.

For high-power work the distance between the objective an the specimen becomes too small to allow of oblique illuminatior and an appliance is used which will direct the light vertically upo the face of the metal, the light being reflected, again vertically, fror the polished surface up the microscope tube. This attachment called a vertical illuminator, is made in several forms, and consist essentially of a small cell which contains either a right-angled glas prism (Fig. 3), or a thin circular cover glass (Fig. 4). The body o

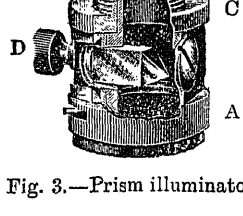

Fig. 3.—Prism illuminator.

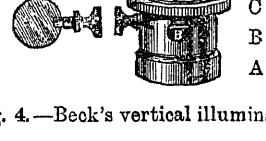

Fig. 4.—Beck's vertical illuminator.

the cell, A, is pierced transversely by an aperture, B, and can be rotated completely about the end, C, which screws into the microscope tube; the objective is screwed into the lower end of the vertical illuminator. A beam of light from the condenser is directed to the side aperture, B, and by turning the prism or the plate, D, about its axis, which is at right angles to both the axis of the aperture and the optic axis of the microscope, the illuminating ray may be reflected down from D upon the face of the specimen; the light is again reflected from the specimen up the microscope tube to the eye-piece. An iris diaphragm is provided at the lower end of the apparatus. With this method of illumination the unattacked parts of the specimen appear bright, since they reflect almost the whole of the incident light, whereas the etched parts appear relatively dark, on account of the scattering due to the roughened surface; thus the appearance of the metal under oblique illumination is often reversed with vertical illumination.

Mr. W. Rosenhain has devised, for metallurgical work, a special microscope which differs considerably from the ordinary pattern, and is shown in Fig. 5. The microscope tube, A, or optical portion

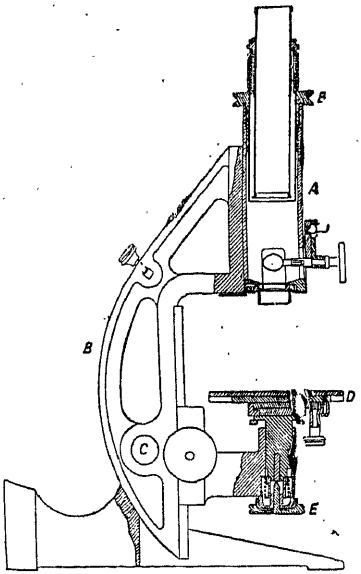

(*a*) Vertical position.

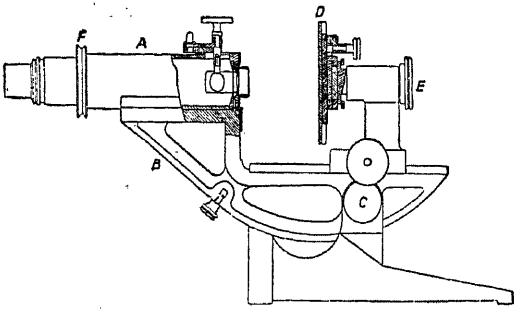

(*b*) Horizontal position.

Fig. 5.—Rosenhain's metallurgical microscope.

of the instrument, is rigidly attached to the limb, B, which is of girder section and can be rotated from a vertical position, Fig. 5 (*a*), to a horizontal position, Fig. 5 (*b*), about a pin, C, in the base.